BOLTORQ

Inspiring Bolting Era, Accelerating Growth

Hydraulic Torque Wrench

I B T Series

www.boltorq.com

Hydraulic
Torque Wrench

BOLTORQ
Inspiring Bolting Era, Accelerating Growth

Hydraulic Torque Wrenches are a work horse of the bolting world, readily available and proven, the Wrenches have a wide variety of applications.

FEATURES :

- Simple, faster, efficient and reliable Torque Wrench.
- High pressure seal design, suitable for static & dynamic applications.
- Quick push through drive for ease of loosening & tightening.

SPECIFICATIONS :

- Available torque ranges up to 50,000 Ft. Lbs. with Maximum operating pressure of 10000 PSI (700 bar).
- Applications include Tower Bolt Sections, Pillow block for gearbox / Alternator and Yaw drive and cover most bolt sizes for Wind Turbines.
- Special Tools for Holding Available.
- BOLTORQ Hydraulic Torque Wrenches maintain an accuracy of ± 3% while torquing.

BOLTORQ manufactures Simple, Faster, Efficient and Reliable Hydraulic Torque Wrenches that are user friendly. The high strength alloy steel and controlled vacuum heat treatment ensures stronger drive components. Improved high pressure seal design is suitable for static & dynamic applications.

There are -

- Provision for lifting tools / handle.
- Standard spline design with torque effective length for exact PCD engagement of reaction Arm.
- High strength aerospace aluminium material for light weight and stronger body design.
- Scratch proof hard anodized body and reaction arm.

TECHNICAL DATA

TYPE	07IBT	1IBT	3IBT	5IBT	8IBT	10IBT	20IBT	25IBT	35IBT	50IBT
Torque (N.m)	112-1120	183-1837	451-4512	752-7528	1078-10780	1551-15516	2666-26664	3472-34725	4866-48666	7200-72000
Bolt Size (M)	14-30	16-36	22-48	27-56	30-64	36-72	42-90	48-100	64-120	72-125
Weight (Kg)	1.8	2.5	5	8	11	15	26.5	35	50	87
Square Drive	3/4"	3/4"	1"	1-1/2"	1-1/2"	1-1/2"	2-1/2"	2-1/2"	2-1/2"	2-1/2"

Hydraulic
Torque Wrench

BOLTORQ
Inspiring Bolting Era, Accelerating Growth

1) Quick push through drive for ease of loosening and targeting.
2) Fine Ratchet and Pawl for better engagement.
3) Multi tooth drive segment ensures and engagement upto 32°.
4) Balanced drive Rod - Side load free piston movement.
5) Laser engraved torque chart in (Nm & ft lbs).
6) Hard chrome plating on piston rod ensures better wear resistance of rod seal.
7) Self lubricating low Nickel Bronze drive bush protects the body from wear.
8) 360° x 180° swivel for Hydraulic Couplers offer better degree of movement.
9) Leak proof quick connect couplers for easy & safe operation.
10) End-cap design for sufficient back pressure for smooth piston forward force.
11) Rigid reaction suitable for heavy load application.
12) Simple design reaction arm release button for ease of operations.
13) Alloy Steel reaction boot (Available in multi-color option).
14) Cold worked cylinder bore for longer life and super finish for long working conditions.

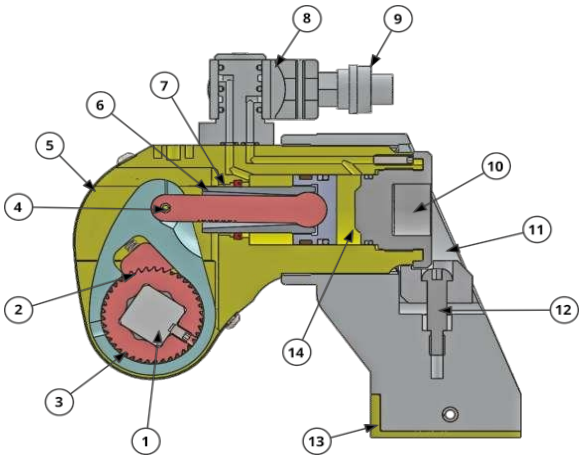

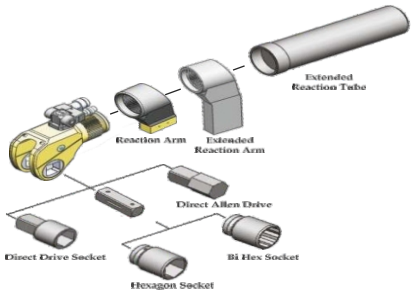

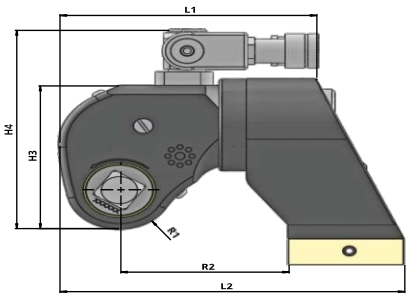

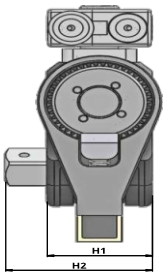

DINENSIONAL DATA

TYPE	L1	L2	H1	H2	H3	H4	R	R1	R2	R3
07 IBT	110.8	139.3	42	65.8	76.2	108.1	75	20.5	68.3	25
1 IBT	144.5	173.5	50	72	96	131	91.5	26	85	29
3 IBT	178	229	68	95	127	176.5	123.5	34	114	40
5 IBT	210.5	270.5	80	123	149	199	140	39	137	46.5
8 IBT	222	293	90	134	167	217	165	47	153	47
10 IBT	245.5	317.5	100	142	182	232	178	51	154	58.5
20 IBT	307.5	383.5	120	183	220	270	213	59	186	71
25 IBT	323	401	137	200	247	297	228	66	199	66
35 IBT	372.5	496.5	153	216	282	332	243.5	77	241	79
50 IBT	400	516	160	223	291	341	258	81	259	97.5

BOLTORQ

Inspiring Bolting Era, Accelerating Growth

Hydraulic Torque Wrench

I B T Series

BOLTORQ INFRACON PVT LTD

Plot No. 22, Pramukh Industrial Park, Near Oriental, Opposite PBW Brass, Kansumra, Jamnagar, Gujarat, 361006

Info@boltorq.com | +91 98927 03895 | www.boltorq.com